MR Passenger Elevator

Hoistway Structure		
Concrete ☐	Brick & Concrete ☐	Other _____

☐ Unstandard ☑ Standard

NOTE

HW	HOISTWAY WIDTH	CW	CAR INSIDE WIDTH
HD	HOISTWAY DEPTH	CD	CAR INSIDE DEPTH
OP	DOOR OPENING WIDTH	CH	CAR HEIGHT
ROP	WALL OPENING WIDTH	MRW	MACHINE ROOM WIDTH
OPH	DOOR OPENING HEIGHT	MRD	MACHINE ROOM DEPTH
OH	OVERHEAD HEIGHT	MRH	MACHINE ROOM HEIGHT
CAR DBG	DISTANCE BETWEEN CAR GUIDE RAILS		
CWT DBG	DISTANCE BETWEEN COUNTERWEIGHT GUIDE RAILS		

Technical Requirement:

type	TKJ450/1.0 -VF			
F/P/D	/ /	Door type	Center open	
load	450 kg	speed	1.0 m/s	
Machine	MCK200	Roping	2 : 1	
T/sheave	ø 400	D/sheave	ø 400	
car sheave	ø 400	CW sheave	ø 400	
Shaft	HW 1700 mm x HD 1700 mm			
Cabin	CW 1100 mm x CD 1100 mm			
Door	OP 700 mm x OPH 2100 mm			
Speed	1.0	1.5	1.75	(m/s)
Power	4.3	6.4	7.5	(kw)
OH	≥4400	≥4500	≥4600	(mm)
Pit	≥1400	≥1500	≥1600	(mm)
current				(A)

380V 3phase 5wire, 50Hz, fluctuation ±7%

Support Force (N)

R1	R2	R3	R4	P1	P2	P3	P4
35200	21800	4300		58000	45600		

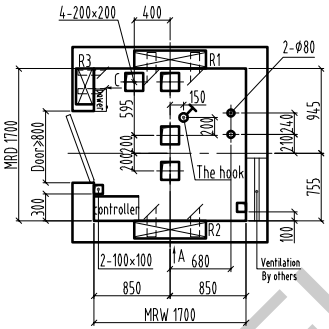

Machine room plan/1:60

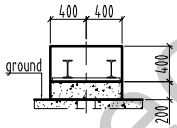

A,reserved hole/1:50

C,reserved hole/1:50

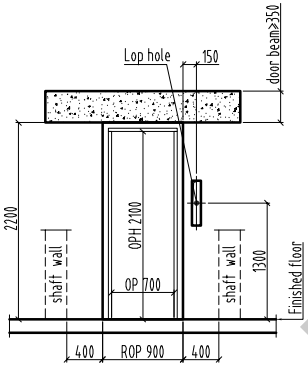

E/reserved hole/1: 60

Bottom box Lop: 100x500 (base station) 100x400 (remaining stations)
No bottom box Lop hole: Ø50 hole

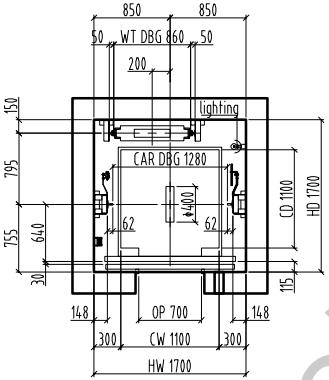

Hoistway plan/1:60

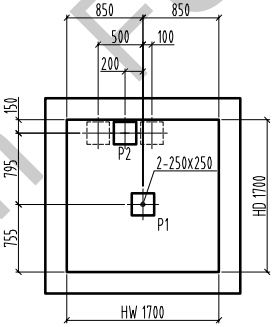

Pit plan/1: 60

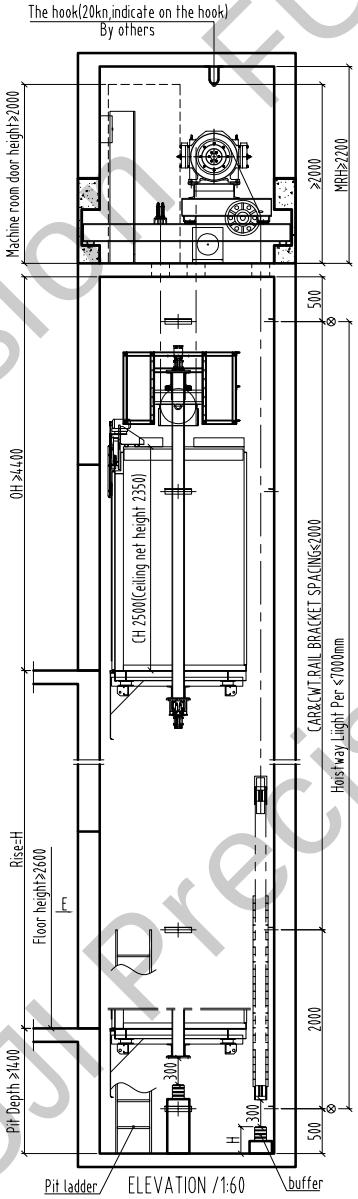

When v≤1.0m/s, H=300; when 1.0m/s<v≤1.75m/s, H=800; when the lifting height is more than 35m, the buffer pier P2 is arranged according to the dotted line, the bearing capacity is pressed A single P2/2 calculation.

OH	≥4400
Rise	H
26 F	
25 F	
24 F	
23 F	
22 F	
21 F	
20 F	
19 F	
18 F	
17 F	
16 F	
15 F	
14 F	
13 F	
12 F	
11 F	
10 F	
9 F	
8 F	
7 F	
6 F	
5 F	
4 F	
3 F	
2 F	
1 F	
G F	
B F	
Pit	≥1400
Floor	Height

Technical Requirement

1. Power supply: machine room need equiped with power supply. Power supply box need be locked. Power supply should be 3P,5 wires,380v 50Hz. Voltage tolerence ±7%,imput power more than 50% of motor power,also equiped with air switch same capacity with power supply,also allow the supplement leakage protector. When use VVVF,need use special leakage switch. Ground resistor should be< 4Ω.It should use insulated conductor from floor to machine room. Keep sepearte for null wire and ground wire.
2. Shaft requirement,it should be only for lift, can not install non-related device(pipe,cable etc),and should keep the person entre into. The shaft plan size mean the min.size measured by plumb line,tolerence ~+50mm. Basically not allow the protruding beam and column. The proof pressure of shaft side should be ≥ 24MPa. Recommend to use full concrete,can not use the reserved steel. In case use solid brick,it should use reserved steel or make the ring beam on the surface of reserved steel,hight≥300mm. If use hollow brick,can choose C25 concrete fill into the wall. also make the ring beam on the surface of reserved steel,hight ≥300mm. If the shaft front wall is brick construction,it should make the concrete beam upsid of door hole to fix the landing door bracket,height ≥ 300mm. If have the requirement in the drawing,it should make the concrete in the entrence of hall door. It should equiped with lamp,brightness ≥50LX,install the lamp at 0.5m from the top and the bottom, in the middle,each lamp at ≤7m. The buffer block shouled be made accompany with special person. before that,need make the reserved ≥4 pcs joint bar,≥Ø12mm,height ≥500mm from the pit floor. and should water proof. Keep the space for person entrance. Pit ladder is by user. Should installed it in a suitbale place if there have basement downside of the pit,should make the buffer block extend to the solid floor downside. If the floor distance beteen 2 fllor ≥11m,should set the safe door with the width 350mm.hight1800mm.
3. Machine room requiremnt(not for MRL),It had the passageway for the traction machine,
keep the entrance unblocked. the door opens outward, also can be locked.
Installed the fan,keep the humidity ≤85%,temperature +5℃~ 40℃,surrounding the reserved hole
should make the 50mm hole,keep the floor plan,also bear the load 700kg/m².
The motor beam should be supported in the concrete block,this concrete block should
extend to the building beam or bearing wall. Bearing side should make the reserved same side steel,
thickness 2mm,bearing side thickness should over the wall thickness 20mm,total thickness more than 75mm.
Standard wall 200mm,recommed the bearing wall thickness ≥200mm.
The hook in the machine room should indicate the max. load. It should install t
he ladder and barrier in case have stair.

Drawing		approver	
Drawing No.	FTK 450-01-		
manufacturing no.			
Project name			

FUJI PRECISION

FUJI Precision